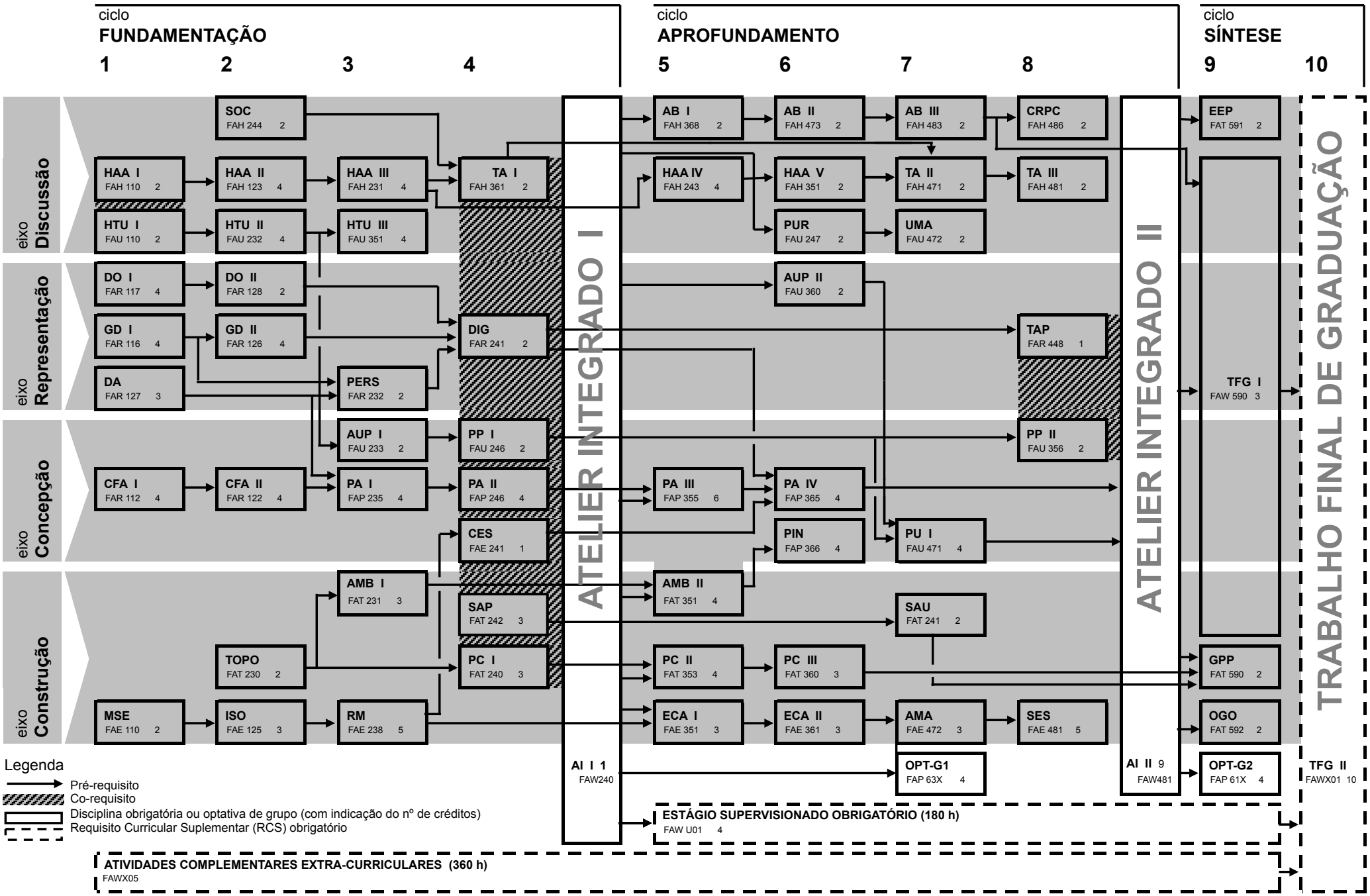GRADE CURRICULAR FAU-UFRJ